FOCUS ON QUALITY

YOUR LIFT EXPERT

Stingl®

CATALOGUE APRIL 2022

SHAFT SAFETY

Mounting Bracket for Shaft Barriers Z-Shape 27
Mounting Bracket for Shaft Barriers U-Shape 27
Telescopic Beams 28
Stingl Safety Door 29
Light-Weight Multi-Purpose Barriers 30
Safety-Barriers 31
Railing Clamps 31

MOUNTING BRACKET FOR SHAFT BARRIERS Z-SHAPE

Mounting bracket for the safe assembly of barriers at lift door openings to protect construction personnel

Barriers protect chest, knee and foot sections

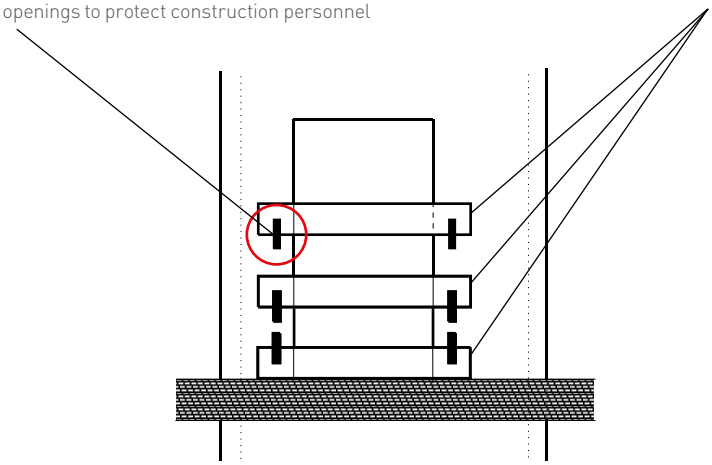

Item No.	Description
008999001	**Z-shape mounting bracket, galvanised**

Details: Flat steel 60x3mm; 220mm long; galvanised; 3 borings

Hole for nail fastening

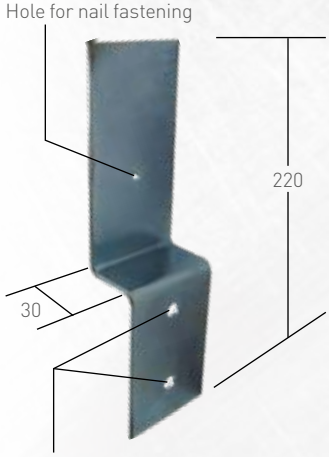

Holes for screw or dowel fixing

MOUNTING BRACKET FOR SHAFT BARRIERS U-SHAPE

The u-shaped steel bracket is ideal for the safe fixing of required barriers at lift door openings to protect construction personnel. The need of only two fixing screws/dowels saves installation time.

Barriers protect chest, knee and foot sections

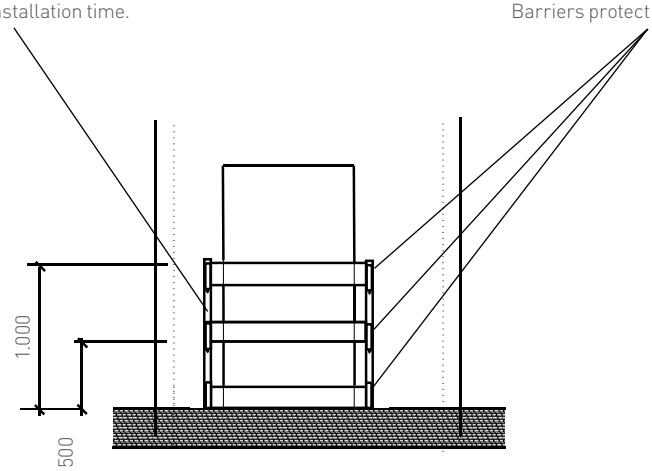

Item No.	Description
008999011	**U-shape mounting bracket, primed, 40x40x3 mm, 1,000 mm long**

Details: Profile steel 40x40x3 mm; 1,000 mm long; primed

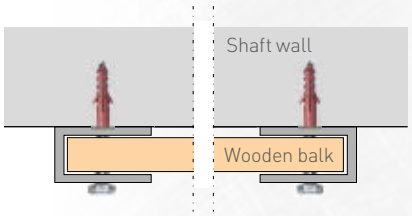

Wooden balk lies atop of dowel

Details: Telescopic steel pipes with pivotal supports all galvanised; optional closure foil and intermediate spans made of synthetic material to protect lift shaft entrances

Variant 1: Partial lift shaft entrance protection

Variant 2: Extensive lift shaft entrance protection

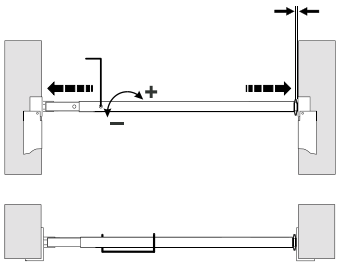

Tensioning procedure

TELESCOPIC BEAMS

TO PROTECT LIFT SHAFT ENTRANCES

Telescopic beams with pressing mechanism allow the fast and safe protection of builders openings and lift doors. They can be used during work in unfinished buildings or for modernisation and repair work in existing buildings.

The telescopic beam meets the requirements of BGI 807/10.02 and BGG 928/04.94 of the German builders' trade association.

For the extensive protection of breakthroughs the telescopic beam can be upgraded with an additional closure foil, suitable in particular for door openings when performing scaffoldless lift installation. The closure foil is fixed by adding two holders to the telescopic beam (see components).

The kit consists of a telescopic beam with pivoting lateral protection posts and, on request, telescopic knee and foot protection elements.

BENEFITS: • The TÜV GS-seal guarantees a safe and approved solution • The telescopic design allows the system to be used for various openings ranging from • 700 to 1,100 mm (S0) and 1,000 to 1,650 mm (S1) • The system is easy to handle so that it meets the requirement of one-man assembly • Installation without drilling or dowels. The parts are easily and quickly clamped into place. • This allows the unit to be used especially in buildings where facades should not be damaged (e.g. during lift modernisation or repair work).

COMPONENTS: • Telescopic beam with pivotable supports, all made of galvanised steel. • Telescopic intermediate spars made of PVC as knee and foot protection • Translucent closure foil with reinforced mesh structure, 2,500x2,100 mm, upper end with fixing eyelets. Imprinted company logo upon request. • 2 foil holders for fastening of closure foil, simple plug-fixing to telescopic beam, max. height 2,300 mm • Spacer made of galvanised steel for use in entrance scenarios without reveal • Sturdy transport bag for easy handling.

Item No.	Description
01506110001	**Telescopic beam S0, for shaft entrance areas of 700 to 1.100 mm, incl. 2 pivotable supports for intermediate spars fixing and transport bag**
01512110001	**Telescopic beam S0, for shaft entrance areas of 700 to 1.100 mm, incl. 2 pivotable supports, 2 intermediate spars, 2 foil holders, 1 neutral closure foil and transport bag**
01506165001	**Telescopic beam S1, For shaft entrance areas of 1.000 to 1.650 mm, incl. 2 pivotable supports for intermediate spars fixing and transport bag**
01512165001	**Telescopic beam S1, for shaft entrance areas of 1.000 to 1.650 mm), incl. 2 pivotable supports, 2 intermediate spars, 2 foil holders, 1 neutral closure foil and transport bag**
01511130001	**Transport bag for configuration S0/S1**
015999003	**Imprint on closure foil**
015999007	**Spacer for telescopic beam**

ACCESSORIES

Item No.	Description
01505000007	**2 telescopic intermediate spars S0 for knee and foot protection**
01505000005	**2 telescopic intermediate spars S1 for knee and foot protection**

NEW

STINGL SAFETY DOOR

STINGL SAFETY DOOR – THE UNIVERSAL AND SAFE SHAFT PROTECTION FÜR FOR MODERNISATION AND NEW CONSTRUCTION

Shaft openings must be secured against collapsing and falling objects, especially with modernisation in existing buildings with non-specialist visitors (e.g. house residents and hotel guests), but also in new buildings. What is needed here is a safe, flexible, full-surface and stable solution. The Stingl safety door. The Stingl safety door is the professinal answer showing all those strengths.

The revolving doors are made up of one trapezoidal sheet core and are surrounded by one aluminium frame. The three rotary bolt locks can be horizontally moved and fixed after opening the door. If the door reveals are too short or not present at all, other alternative threshold corner elements could be used, however they must be dowelled with the threshold or the masonry or concrete wall.

The doors can be fastened at any time to the left or the right. For this, just a small modification of the vertical supports and relocation of the quarter-turn locks is required.

OPTIONS: Optionally, the shaft protection Stingl safety door can be completed by a three-part side protection (handrail, knee- and foot guard). If work has to be carried out with the doors required to be open temporarily, the side protection serves as an additional fall protection. When bracing the vertical door supports, the door threshold and lintel must be able to withstand a vertical load of V = 3.6 kN. The clamping force can be visually checked and monitored with the help of disc springs. The Stingl safety door can be opened and closed from the outside and inside of the shaft with four triangular rotary bolt locks (2 pieces per door element). Depending on the door width, a telescopic profile is placed on the threshold and braced. The profile ensures an additional securing of the vertical brace supports.

On request, an additional door element or an on-site door element can be provided for wider shaft openings. Fixed element (e.g. wooden board or sheet metal storage) can be extended.

On request, we can also produce signs that can be temporarily attached to the door elements (magnetically or with hook and eye points) or permanently attached (riveted or screwed) (e.g. logo or warning notice "No entry").

Item No.	Description
151810210010	Swing door SMALL 1000x1040 top
151810210020	Swing door SMALL 1000x1040 bottom
151810210501	Vertical support left
151810210502	Vertical support right
15181021060	Form-fit door threshold SMALL
15181021070	Three-part side protection SMALL
15181222001	Swing door MEDIUM 1100x1240 top
15181222002	Swing door MEDIUM 1100x1240 bottom
15181222060	Form-fit door threshold MEDIUM
15181222070	Three-part side protection MEDIUM/LARGE
15181422001	Swing door LARGE 1100x1440 top
15181422002	Swing door LARGE 1100x1440 bottom
15181021134	Flat holder for vertical support right
15181021135	Flat holder for vertical support left

Details Version 1:
Material: made of polyethylene
Width: 970mm
Height: 800mm
Depth :30mm
Weight: 3kg per panel
standard barrier design 3 panels

Details Version 2:
Material: made of polyethylene
Width: 1,100mm
Height: 1,100mm
Depth: 30mm
Weight: 5.5kg per panel
standard barrier design 3 panels

Details Version 3:
Material: made of polyethylene
Width: 600 mm
Height: 350 mm
Depth: 1,000 mm
Weight: 15kg

LIGHT-WEIGHT MULTI-PURPOSE BARRIERS

The re-usable barrier systems are especially suitable to create a safe working environment during maintenance and modernisation of lifts and escalators in areas accessible to the public. The single panels are modular and can be linked together to enclose any shape or size area.

Features	Version 1	Version 2	Version3
Signal colour yellow with warning symbols	•	•	•
For interior use	•	•	•
For exterior use	•	•	•
Small pack size	•	•	•
Easy cleaning	•	•	•
Different warning symbols as an option	•	•	o
Pedestal made of hard rubber for improved stability	•	•	o
Can be fixed to the ground with U profiles	•	•	o
Can be fixed to the ground with U profiles	•	•	o
Pin and splint retainer	•	•	o

BARRIER SYSTEM

VERSION 1		VERSION 2		VERSION 3	
Item No.	Number of panels	Item No.	Number of panels	Item No.	
0081080097	**1**	**0081110110**	**1**	**008999019**	**Mobile barrier system**
0082080097	**2**	**0082110110**	**2**		
0083080097	**3**	**0083110110**	**3**		
0084080097	**4**	**0084110110**	**4**		
0085080097	**5**	**0085110110**	**5**		
0086080097	**6**	**0086110110**	**6**		

ACCESSORIES VERSION 1 AND 2

Item No.	Description
008999017	**Base for multi-purpose barrier version 1 + 2**

SAFETY-BARRIERS

Item No.	Description	HxW	
0081103781	Warning manikin	1,030x780 mm	1
008999022	Mobile warning sign 2-sided	660x279 mm	2

1

2

RAILING CLAMPS

Light railing clamps for clamping an area of 0–400 mm. The railing clamps can be clamped on the scaffold covering or on the longitudinal and cross bars.

Absolutely neccessary for safe fall protection when working on conventional wooden scaffolds.

TECHNICAL FEATURES: • Hot-galvanized for a long service life • Closed brackets to stop the side guard boards being lifted out • Dimensions of the side guard boards 15x3 cm • Tested and approved by the trade association.

OTHER TYPES AVAILABLE UPON REQUEST.

Item No.	Description
008999008	Railing clamp, Clamping area 0–400 mm
008999009	Railing clamp, Clamping area 0–800 mm

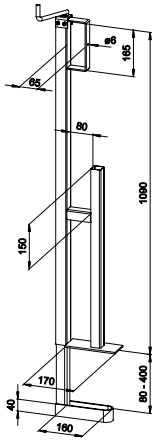

DSG1 GmbH

Stingl Systems GmbH
Dimbacher Strasse 25
D-74182 Obersulm-Willsbach
Germany

Phone +49 (0) 7134 / 13797-13
Fax +49 (0) 7134 / 13797-11

www.stinglonline.de
export@stinglonline.de
https://shop.stinglonline.de